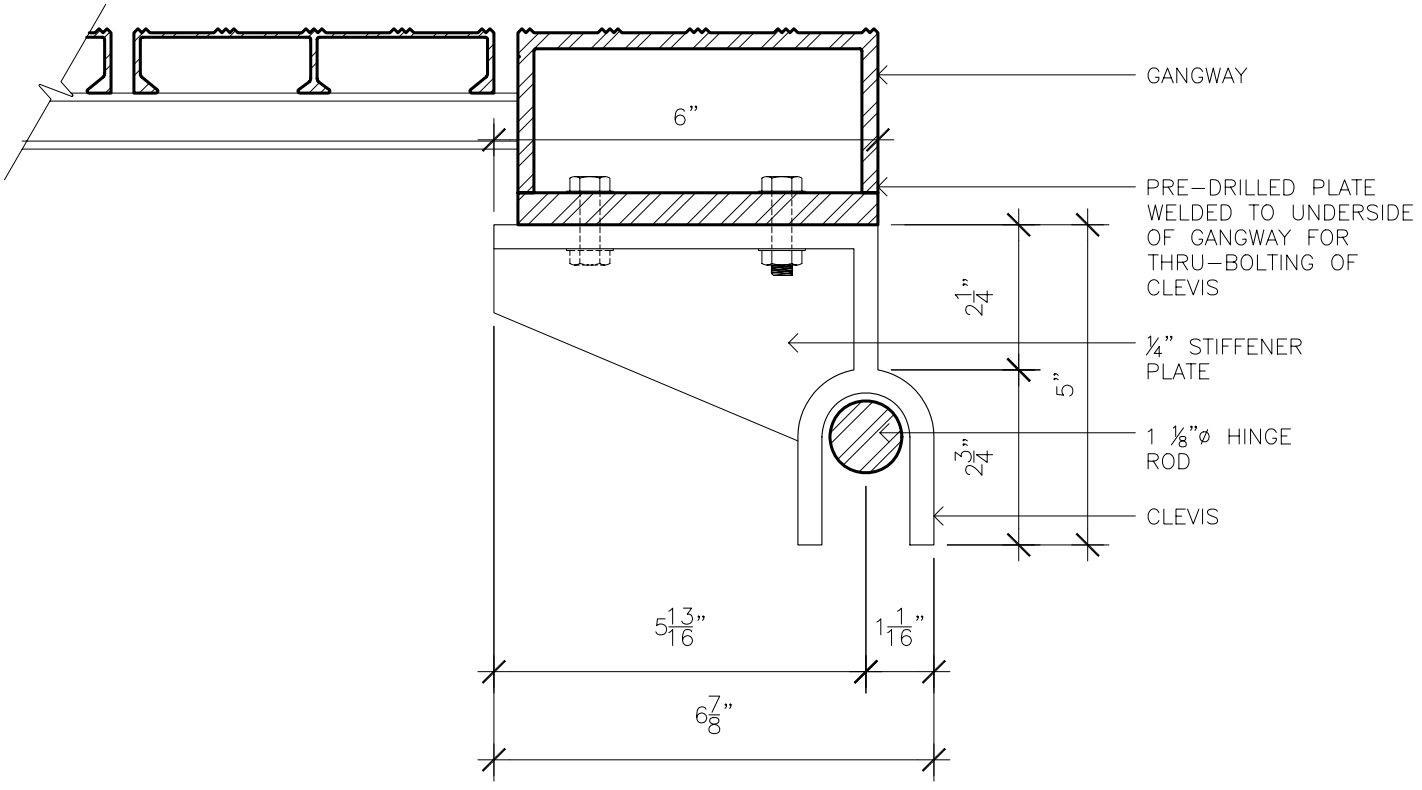

1 SIDE ELEVATION
N.T.S.

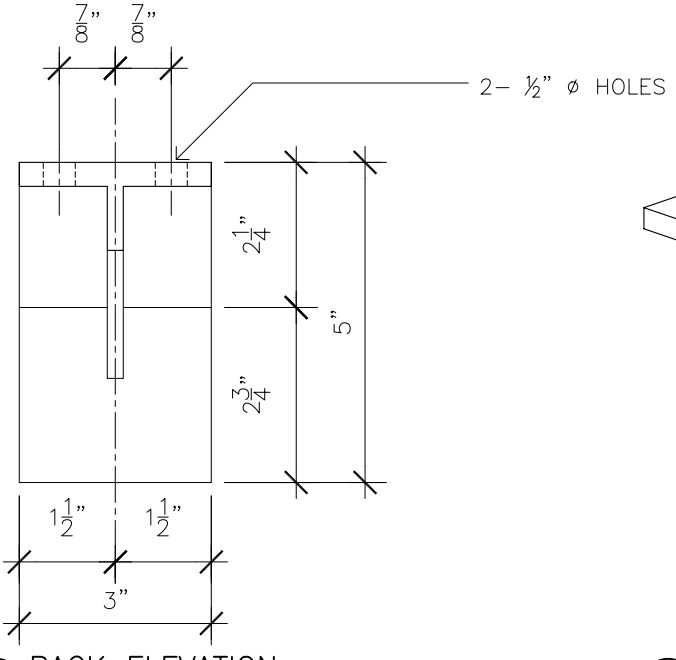

2 BACK ELEVATION
N.T.S.

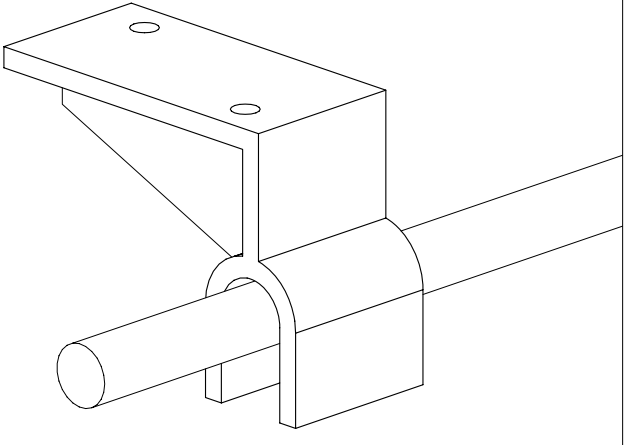

3 AXONOMETRIC
N.T.S.

www.gangways.biz
docksramps@aol.com

207.584.5933 TEL
207.584.2018 FAX

SUPERIOR DOCKS

21 TOWN LINE ROAD
WALTHAM, MAINE 04605

CLEVIS DETAILS

FILE NAME: GANGWAY 2.DWG